4EAT Transmission Diagnosis & Service

Phase 1

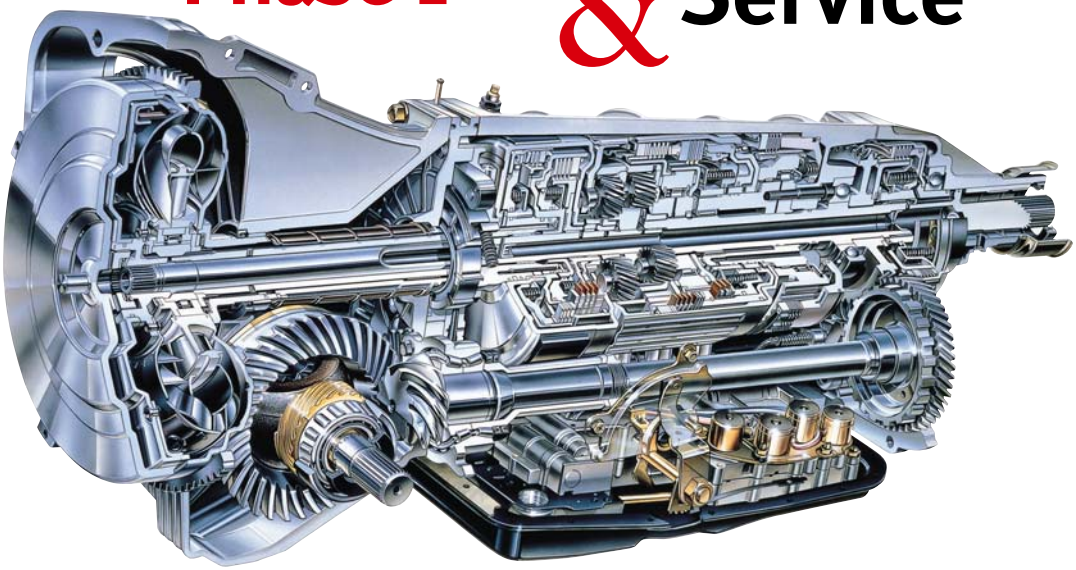

The Subaru 4EAT is a four speed microprocessor-controlled transmission that was installed in many 1987.5-98 Subaru vehicles. It is not a three speed transmission with overdrive. It features a lock-up torque converter, which locks up in all forward gears except 1st.

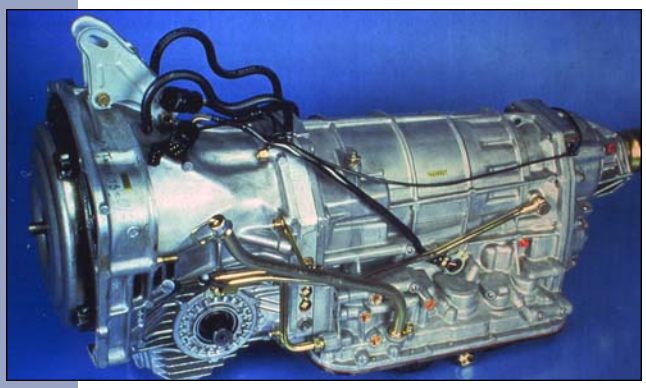

4EAT assembly

The shift quadrant has been designed in accordance with the four forward speeds. In P, R, or N, there aren't any special features. With the selector in D, the transmission shifts through all four gears. With the selector in 3, the transmission shifts 1, 2, 3. When the selector is in the 2 position, the transmission shifts through 1st and 2nd. If necessary, 3rd gear is computer selected to prevent the engine from over-revving.

Manual 1st gear is only activated when the 1-HOLD button is depressed and the shifter is in manually selected 2. This will provide engine braking. The transmission will upshift through 2nd and 3rd if necessary, in order to prevent the engine from over-revving.

The 1-HOLD indicator is displayed on the combination meter when the button is activated. When the computer overrides the 1-HOLD gear selection the display will change.

An enhanced version of the 4EAT was introduced with the 1990 Legacy. Although similar in design to the earlier 4EAT, the shift quadrant is different. The Legacy 4EAT has a seven-position quadrant: P-R-N-D-3-2-1. The 1-HOLD button has been deleted and a manual button has been added.

XT Selector Lever

When the selector is in 3rd range, manual switch ON, the transmission will start in 2nd gear and shift to 3rd. In 2nd range

manual, the transmission starts and stays in 2nd gear, but will upshift to 3rd gear at 6500 RPM to prevent damage to the engine. In 1st range manual the transmission stays in 1st gear and also will upshift to second at 6100 RPM to prevent damage to the engine. Additionally, on all wheel drive (AWD) vehicles, the TCU applies a more aggressive AWD map when the selector is in the 1st position, manual switch ON or OFF. These changes result in improved driveability on low traction road surfaces.

In 1995 the manual button was deleted. When 3 is selected, the transmission shifts through1st, 2nd, and 3rd. When 2 is selected, the transmission shifts 1st and 2nd. When 1st is selected, the transmission stays in 1st. On 1995 through 1998 model year vehicles, the TCU controlled upshift logic was replaced by a fuel cut logic.

The 1993 Impreza was introduced with fuel cut logic, never having an auto up shift logic.

1992 through 1997 SVX used the same shift logic as the 1990-94 Legacy. The Manual button was retained until production of the vehicle was discontinued in 1997.

The TCU monitors various engine and vehicle inputs, i.e., throttle position and vehicle speed, etc. It also controls the electronic shift solenoids in the transmission.

GEAR RATIOS

1st	2.785
2nd	1.545
3rd	1.000
4th	0.694
REV	2.272
Final Drive: 3.70:1 or 3.90:1	
Legacy Final Drive: 4.11:1	4WD
3.70:1	FWD

Refer to Service Manual for specific model gear ratios.

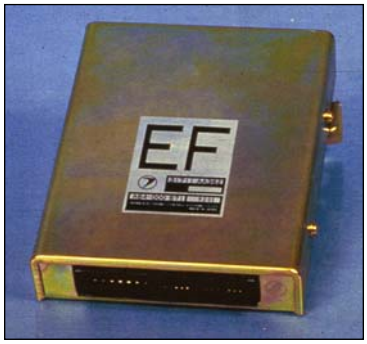

TCU

Electronic Control System Overview

The electronic control system consists of various inputs (sensors) and outputs (lights and solenoids) in addition to the Transmission Control Unit (TCU).

This is the second generation of Subaru automatic transmission. In addition to being smoother and quieter, it is designed to help maximize fuel economy while providing performance.

It monitors the engine and transmission performance conditions, the driver's demands and the vehicle speed.

Transmission Control Unit

The TCU is a highly sophisticated microprocessor with a self-diagnostic long-term memory. It also has a failsafe function, which maintains driveability in case of a major electrical component failure.

In a transmission equipped for AWD the TCU utilizes a program which continually changes the degree of AWD based upon vehicle operating condition(s).

The TCU controls shifting and line pressure in addition to the lock-up torque converter and the MPT clutch.

TCU Inputs

- Throttle sensor/idle switch
- Vehicle speed sensor #1
- Vehicle speed sensor #2
- Tachometer signal
- Inhibitor switch
- Cruise control signal
- ATF temperature sensor
- Ignition/battery voltage
- 1-HOLD switch
- Forced front wheel drive (FWD)

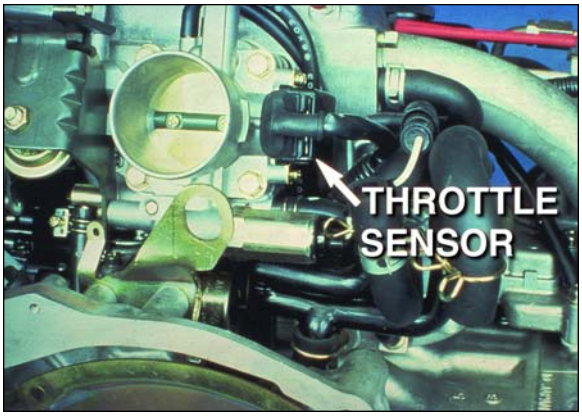

Throttle Sensor

The throttle sensor/idle switch is basically electrical throttle pressure. The load signal affects: shifting, line pressure and lock-up. The closed throttle input affects the lock-up release mode as well as smooth downshifting into 2nd gear. It also causes a reduction in the pressure.

Vehicle speed sensor #1 is mounted to the transmission and is basically electrical governor pressure. It is used to detect vehicle speed and it affects shift points, lock-up and line pressure.

In FWD transmissions, the speed sensor reads parking gear rotation at the front output shaft. In AWD transmissions, it senses the transfer clutch drum rotation at the rear output shaft.

Vehicle speed sensor #2 is built into the combination meter. In FWD units, it is used as a back up for speed sensor #1. In AWD units, it is used as the front output shaft speed sensor.

An electric speedometer system was first introduced on the SVX in 1992. It was later added to the1995 Legacy, 1996 Impreza and 1998 Forester. The system uses a Magnetic

Resistance Effect (MRE) speed sensor driven by a conventional speedometer drive gear system. The speed sensor, which generates four pulses per revolution, is located on the front differential housing.

The Speedometer Driving Unit (SDU) receiving pulses from the MRE sensor processes the signal sending the information to the transmission control unit.

The TCU compares the speed signal from the front output shaft with the signal from the rear output shaft (sensor #1). The speed differential helps the TCU determine the degree of AWD (along with other inputs).

The tachometer signal affects the shift points at kickdown. The TCU uses the signal to prevent the engine from over-revving.

Note: The TCU will override the inhibitor switch, if necessary, to prevent the engine from over-revving.

The cruise control signal tells the TCU of cruise control activation. This allows for a wider operating range in 4th gear unless a large speed differential exists from the set speed in which case the transmission may downshift. This improves fuel economy.

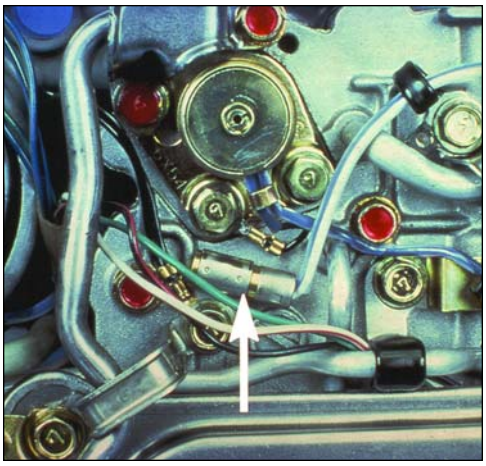

ATF Temperature Sensor

The ATF temperature sensor is located on the lower valve body next to duty solenoid B. When the ATF is cold, the TCU won't allow an upshift into 4th gear. The object is to warm the engine quickly for lower emissions. It is more sophisticated than the KDLH system and less objectionable for the consumer.

When the ATF is hot (AWD only), the TCU shifts the transmission as if in the POWER mode. This pushes the shift points higher which allows the engine to run faster. The oil pump then circulates ATF through the oil cooler more quickly so as not to overheat the engine coolant.

The TCU also monitors system voltage in order to correctly interpret the inputs and alter the control of the outputs. For example, the system is designed for 12-volt operation. When running, however, most vehicles have other than 12 volts available.

The 1-HOLD switch is located aft of the shift quadrant. When activated, it creates a forced 1st gear.

Note: The TCU will shift 2nd to 3rd, if necessary, to prevent the engine from over-revving.

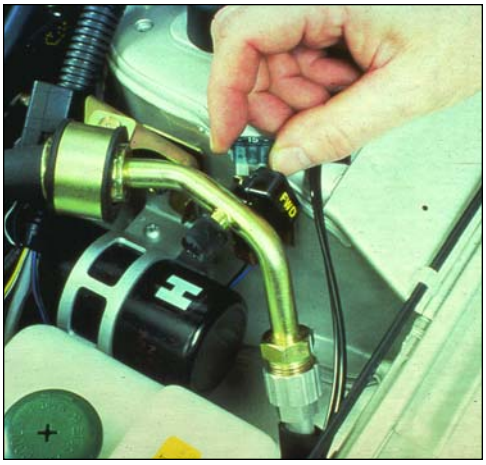

FWD Fuse

The FWD fuse changes the driving mode from AWD to FWD. The FWD fuse is located on the left front shock tower. It is activated by inserting the spare fuse into the under hood connector. The FWD light on the combination meter verifies that the vehicle is in FWD.

The Legacy FWD fuse is located on the right strut tower. The SVX and Forester fuse is located in the main fuse box.

Legacy TCU Inputs

The Legacy fuel system ECM, beginning with the 1990 model year, sends new inputs to the TCU for line pressure control. It networks the MPFI ECU RPM signal and altitude compensation inputs. This provides additional line pressure control for high altitude compensation to reduce shift shock. ABS system inputs turn OFF the over-running clutch when ABS is active and fixes the duty ratio of the MPT to mostly FWD.

Maintenance Precautions

Before jacking up one or two wheels for maintenance with the engine running or before running the vehicle on a chassis dynamometer, the electronic AWD engagement system must be disengaged by installing the spare fuse (15A) of the fuse box into the FWD connector located under the hood. Failure to do so could result in movement of vehicle.

TCU Outputs

There are two types of outputs: solenoid controls and light controls. The solenoids control shifting, line pressure, lock-up and AWD.

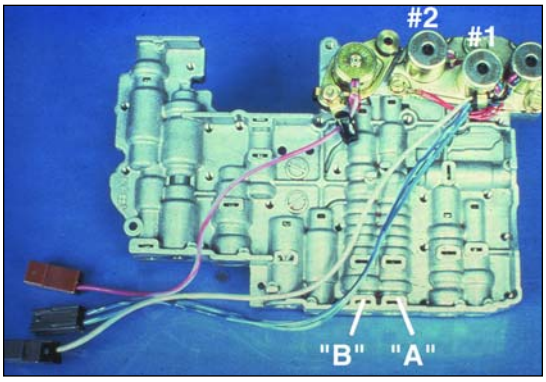

Shift Solenoids and Valves

The light controls indicate operating conditions to the driver. They indicate the POWER mode, manually selected 1st or 2nd gear, or hot ATF (AWD only).

On 1990 and later Legacy models, the light controls indicate hot ATF (FWD and AWD), gears 3 -2 - 1, MANUAL mode and POWER mode.

Shift solenoids #1 and #2 are located on the upper valve body. The TCU induces ON/OFF conditions, which regulate the shifting of the forward gears.

When a shift solenoid is ON, it passes pilot pressure to shift valve A and/or shift valve B. The valve(s) will then shift, feeding the appropriate controlling member circuits (high clutch, band, etc.).

Note: Pilot pressure is nothing more than a pressure held at a constant value.

When a shift solenoid is OFF, the affected shift valve will move to its static position due to spring pressure. The appropriate controlling member circuit will than be fed (high clutch, band, etc.).

COMPONENT APPLICATION

		REV./C	B/B	HIGH/C	FWD./C	OWC (3-4)	OVR/C	Lo/ REV./B	OWC (1-2)	Sol 1	Sol 2
P/N										X	X
R		●				○		●		X	X
D	1st				●	●			●	●	●
	2nd		●		●	●				X	
	3rd			●	●	●				X	X
	4th		●	●	●						X

Shift Modes

Shift solenoid #3 is located on the upper valve body. It is used to control downshifts. It quickly releases the 3-Release pressure during low speed, heavy load situation in order to provide smooth 3-2 downshifts. It operates the overrunning clutch in order to provide engine braking during deceleration. It is also used to cancel the overrunning clutch momentarily during light throttle 3-2 downshifts, or closed throttle 2-1 downshifts. This reduces the shift shock.

Duty Solenoid A is located on the upper valve body. It regulates line pressure at 3 levels:

- Basic: Altered with load, vehicle speed and range signal.
- Shifting: Lower line pressure in between shifts to minimize shift shock.
- Start up: With low ATF temperature or a low tachometer signal (cranking speed), it sets line pressure to a minimum.

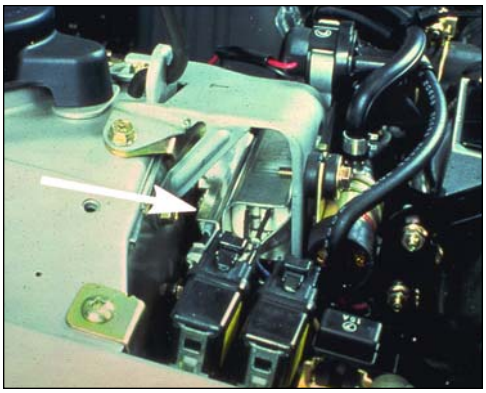

Dropping Resistor

The dropping resistor is wired in parallel with duty solenoid A, and is used to regulate line pressure. It is located on the right front shock tower behind the MPI fuel system-dropping resistor. It takes over line pressure control during the OFF portion of the duty cycle for the duty solenoid. In other words, the duty solenoid is never fully OFF.

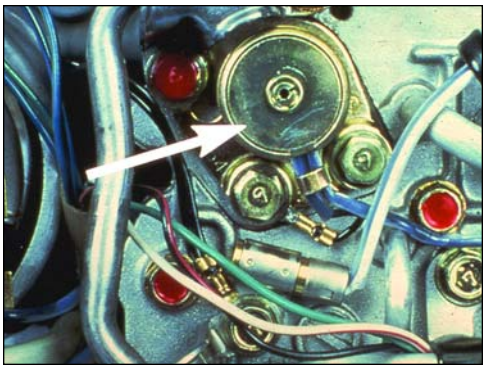

Duty Solenoid B

Duty Solenoid B is located on the lower valve body next to the ATF temperature sensor. It operates the lock-up clutch in 3 modes: ON, OFF and a gradual ON/OFF control of the lock-up clutch during gear shifting in order to reduce shift shock.

Duty Solenoid C is located in the extension housing. It is also controlled by the TCU. It varies the degree of AWD.

Combination Meter Light Operation XT-6 and L-Series

The XT-6 and L-Series gear indicator bar is located in the combination meter shift position indicator. Controlled by the TCU, other quadrant indicators are controlled by the inhibitor switch, both providing a path to ground. 2nd indicator bar is affected by the 1-HOLD switch input. With the 1-HOLD button switched OFF & the shift selector in the 2nd Select position, the TCU grounds the 2nd indicator light circuit illuminating the 2nd gear indicator.

The 1-HOLD indicator light (L and XT only) is located near the shift position indicator. It is activated by the TCU whenever the 1-HOLD button is depressed with the shift lever in 2. It changes the display and cancels the 2 indicator.

The vehicle stays in 1-HOLD unless the TCU determines a potential engine over-rev condition, at which point, the transmission will then upshift.

Note:When 1-HOLD is activated, all other shifting inputs are ignored.

ATF temperature warning light was used on AWD vehicles only indicates overheating ATF. See description of TCU inputs for control unit logic in response of hot ATF.

The Power indicator was a frame that illuminates around the word POWER on the combination meter. Activation logic of the power mode is the same as later models.

Late Model Combination Meter

Legacy, SVX, Impreza & Forester

The manual light is activated when the manual button is depressed. On the 1990-91 model year, the 3 - 2 - 1 light box changed color from green to yellow. This feature was discontinued in the 1992 model year. The Manual Light and Switch were discontinued in all models but the SVX in 1995.

The POWER light is activated momentarily whenever the vehicle is started. The computer, monitoring how quickly the gas pedal is depressed selects the POWER mode. This changes the performance characteristics of the transmission. It delays upshifts and may downshift if necessary. When selected, the computer turns the POWER light ON. The POWER light was eliminated on Legacy beginning with the 1995 model year, but the TCU logic is the same.

Note: There are a number of predetermined rates based on the relationship between vehicle speed and throttle angle. These determine ease of access to the power mode. As a general rule, it is easier to activate power mode at lower speeds from a light throttle than it is at higher speeds from a light throttle.

Power Pattern Mode increases up and down shift points. It is deactivated by vehicle speed and throttle angle. For example, if speed is equal to or greater than (approximately) 40 MPH with a light throttle deactivation is immediate. Conversely, if the speed is less than (approximately) 40 MPH a time lag up to 3 seconds will occur before resuming normal shift pattern.

ATF temperature warning light is provided on both FWD and AWD vehicles. It is activated by the TCU indicating overheated ATF. The TCU logic will shift the transaxle as if in the power mode, moving more ATF volume through the cooler.

The indicator light was discontinued in the 1993 model year, but the logic for controlling hot ATF remained.

Starting in the 1995 model year, the HOT ATF indicator light was reintroduced. It performs the same as in the past, with an added function. When the vehicle is started, it is lit momentarily. If it is flashing when the vehicle is started, this indicates the TCU has detected an electrical failure. When the TCU is programmed to do so, it will flash a trouble code to assist in diagnostics.

Fail Safe System

Note: The 4EAT is a highly reliable transmission. Should an electrical component malfunction, it will enter failsafe mode.

Fail Safe Components and Failure Results

If a speed sensor fails, the remaining sensor signal will be used.

In case of throttle sensor failure, the idle contacts will signal the throttle opening. Line pressure will go to maximum at open throttle and it will go to minimum at closed throttle.

Although the inhibitor switch may fail, the manual valve will still be in the correct position for all selected ranges. In P and N however, it may affect start-up, therefore, there is a potential for a no-start condition. In Reverse, the TCU is passive. Therefore, an inhibitor switch failure has no effect. If multiple signals are seen in the forward ranges the inhibitor switch is ignored and there is no fourth gear.

If the 1-HOLD switch is defective, the system operates in the same manner as an inhibitor switch failure in the forward ranges.

If the MANUAL switch is defective (Legacy only), the transmission will shift normally in D position. It will operate the same as an inhibitor switch failure when the selector position 3 - 2 - 1.

If shift solenoids #1 or #2 malfunction, the TCU deactivates the other. This results in either 3rd gear or Reverse (when selected).

If duty solenoid A fails, line pressure goes to maximum.

If duty solenoid B fails, the torque converter lock-up will not occur.

If shift solenoid #3 malfunctions, the overrunning clutch is always ON and there will be engine braking during deceleration.

If duty solenoid C should fail, the AWD control will be set to maximum and the rear wheels will always be powered.

Self Diagnostic System

The 4EAT self-diagnostic system has three modes: a user mode and two dealer modes. In the first instance, the user is notified through the POWER light when a malfunction occurs. The failure is communicated after the next ignition OFF/ON cycle. For a more detailed description of the user mode, see the appropriate troubleshooting section of the service manual.

Note: The system will fail safe for "limp home" when a component fails. The light will not illuminate until the ignition is switched OFF and then switched to ON again.

For specific information on the self-diagnostics dealer modes, see the appropriate trouble shooting section of the service manual.

XT and L-Series Diagnostics

To enter into the dealer mode to retrieve trouble codes it is necessary to operate the inhibitor switch in a specific sequence as outlined in the service manual. Once this has been performed the POWER light will flash a code sequence.

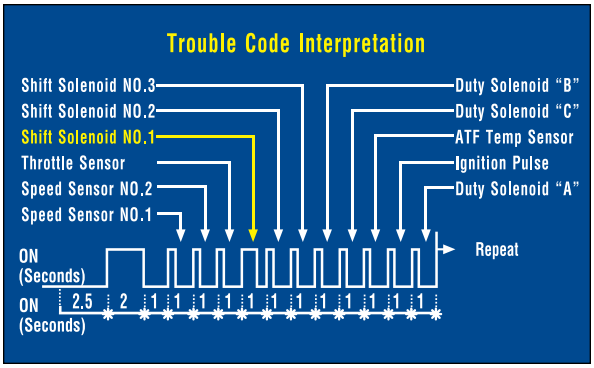

The TCU checks 11 components and displays the codes differently than other on board diagnostic functions. When activated, the POWER light flashes OFF for 2.5 seconds, ON for 2.5 seconds then 11 flashes. This sequence will repeat after the 11th flash.

Each component is assigned a position in the sequence (i.e. ignition pulse is position #10 and each position has a duty cycle of one second. Normal functioning components Flash on at a 10% duty, light ON for 0.1 second, light OFF for 0.9 second. Malfunctioning components flash on at a 60% duty, light ON for 0.6 second, light OFF for 0.4 second.

Example: TCU programmed for self-diagnostics, Shift Solenoid #1 defective position #4 in sequence. POWER light OFF for 25 seconds light ON for 2 seconds 3 flashes at 10% duty (0.1 second) 4th flash at 60% duty (0.6 seconds) 7 flashes at 10% duty cycle repeats.

1990-94 Legacy, 1992-95 SVX, 1993-95 Impreza Diagnostics

The procedure to retrieve trouble codes is similar to previous years. The manual button replaces the 1-HOLD button function. Three modes are available:

- Current trouble codes
- Past trouble codes (Long-term memory)
- Clear memory

The codes are communicated on the POWER light. There are 12 codes for the AWD and 11 codes for the FWD vehicles. They are displayed similar to fuel system codes, one long flash = 10 (1.2 seconds), one short flash = 1 (0.3 seconds). For example - one long, two short = Code 12.

Select Monitor Analysis

The Select Monitor is a powerful tool for analysis of an electrical condition.

This form of analysis is the preferred troubleshooting self-diagnostic method. The Select Monitor identifies current problems, past problems (through long-term memory) and indicated actual circuit and component performance. Other functions that can be useful diagnostic aids are graphing; LED display of switched components, Max. & Min. readings and save data and play back.

Also the Select Monitor Oscilloscope function serves to assist in finding intermittent electrical conditions using the trigger function.

Depending on the model and year vehicle, the data list displayed can be extensive. OBD-II functions also have freeze frame data on 1995 and newer Subaru vehicles.

1995-98 Legacy, 1996-98 Impreza, 1996-97 SVX, 1998 Forester, Diagnostics (OBD -II Vehicles)

The AT Oil Temperature light operates under the following conditions: Ignition switch ON/engine OFF is the bulb check mode, the light remains ON. Normal: Ignition switch ON/ Engine ON, light remains on for two seconds from engine start.

Note: A failure is never reported via the AT oil temp light during current operation. The TCU waits until the next ignition cycle to display the following AT oil temp light condition. Therefore the driver may detect an abnormal driveability condition (fail safe operation) with no AT oil temp light indicating a failure.

Abnormal - With the ignition switch ON and the engine running, the light remains ON for 2 seconds from engine start. OFF for 0.25 seconds, ON for 0.25 seconds 4 times, then OFF for 2 seconds. Cycle repeats 4 times for a total of 16 Blinks.

Abnormal - ATF Temperature is too high The AT temp light comes ON and stays ON until the ATF temperature returns to normal.

Trouble Codes

Trouble code retrieval is similar to previous models, except for grounding terminal # 5 of connector B82 a 6 pole black, right side of steering column. Trouble codes will be displayed through AT Temp light with the following differences. There are 14 possible trouble codes communicated from the TCU. They are displayed in the same format as old fuel system trouble codes, long Flash = 10, short flash = 1. For example: 2 long and 4 short = code 24, Duty Solenoid C.

The clear memory procedure is simple and quick, just remove fuse No. 14 for at least one minute.

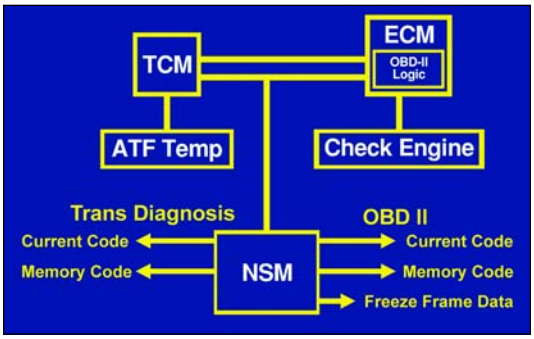

OBD-II Logic Tree

OBD-II Operation Overview

The system monitors components and their operation, conducting continuity and performance checks. The check engine light or MIL illuminates when a code is set into ECU memory. Problems with the 4EAT are communicated from the TCU to the ECU.

There are 2 trouble codes that are generated as soon as a problem occurs, turning on the MIL. With 22 others requiring a fault or error during two consecutive trips, before turning on the MIL. A trip is defined as a driving pattern in which test parameters are reached for a given time. A failed trip will be erased if the next trip is a good one.

Transmission codes generated in OBD-II have freeze frame information available on the Select Monitor in the fuel system section of data display.

OBD-II Purpose

The Society of Automotive Engineers (SAE), in cooperation with the EPA have, in accordance with regulation J2012 of the 1990 Clean Air Act, established DTCs that are to be used by the automobile industry, beginning with the 1996 model year. DTCs that use a P0 prefix are SAE assigned. DTCs that use a P1 prefix are categorized by SAE but are assigned by a vehicle manufacturer.

OBD-II checks a component and its operation similar to OBD-1, which is used on pre 1995 model vehicles. OBD-l for example, checks the Torque Converter Clutch System Electrical by monitoring for minimum and maximum voltage signals. OBD-II also performs this function. For example examine DTC P0743.

The TCM continuously monitors duty solenoid B Circuit. A fault will register if the following conditions are met:

1. When the TCM supplies an ON signal to the coil of the solenoid, the voltage from the coil is lower than pre-established parameters.
2. When the TCM supplies an OFF signal to the coil of the solenoid, the voltage from the coil is higher than pre-established parameters.

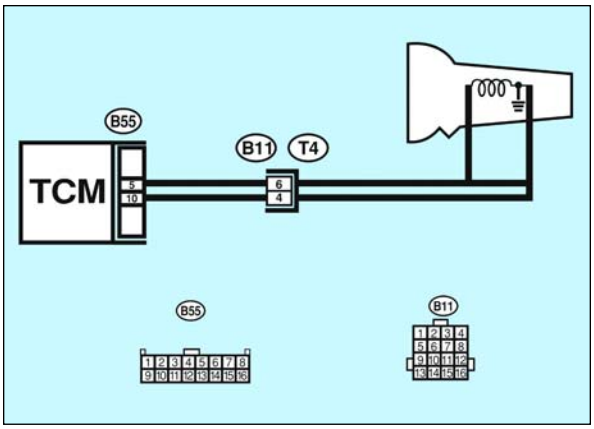

TCM Monitor

Condition (a) or (b) will cause the DTC to register in the ECM memory on OBD-I or OBD-II systems.

OBD-II in addition to the previous will monitor for performance of the Torque Converter Clutch System. For example examine DTC P0740.

The detecting condition: Slipped wheel RPM (absolute value of difference from transmission input RPM computed from engine speed and vehicle speed) continues greater than (40 + vehicle speed / 2) for 10.2 seconds. When the lockup duty ratio is greater then 90% in lock up control mode detected by the TCM.

The TCM continuously monitors the torque converter clutch system. A fault will register if the following condition is present:

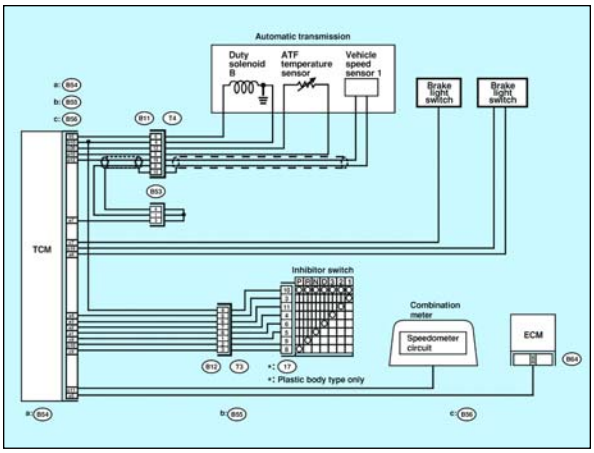

Torque Converter Clutch Monitor

Engine speed is equal to or greater than output shaft speed (speed sensor 1) multiplied 4th gear ratio multiplied by 9/8.

The following conditions must be met before the test is performed.

1. The transmission is in 4th gear.
2. The duty ratio for lockup duty solenoid is equal to or greater than 90%.

The DTC will set and the MIL will illuminate if a fault is registered during two consecutive trips.

Control Unit Networking

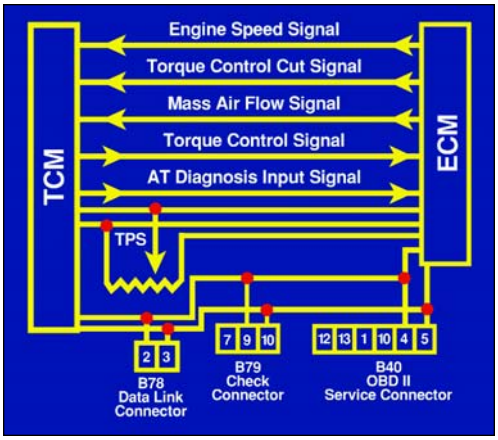

Both the Fuel Injection control unit and the Transmission control unit share processed information and sensor input by shared signals.

Engine speed signal is sent to the TCM from the ECM, influencing Torque Converter lock-up.

Torque Control Cut signal is sent to the TCM from the ECM preventing fuel cut under certain conditions. Diagnostics are provided by the TCM as code 16, signal diagnostics are not provided in OBD-II.

Torque control signal (unique from the Torque Control Cut signal) is created in the TCM logic to communicate to the ECM that torque reduction (fuel cut) is required to reduce shift shock during a wide-open throttle upshift. Diagnostics are provided by the TCM as code 25 and also in OBD –II logic as DTC P1103.

The Mass Airflow signal is sent to the TCM from the ECM as a back up for influencing the shift points in the event of a throttle position signal loss. Line pressure is also affected by the Mass Airflow sensor input, lowering the line pressure during up shifts, reducing shock. There are no corresponding onboard diagnostic codes for this signal in the TCM.

Automatic Transmission Diagnosis Input Signals represent an electrical check for the circuit that networks the TCM and ECM, communicating diagnostic information to the ECM. This signal has no corresponding 4EAT code.

Troubleshooting and Adjustments

Preliminary Inspection

Check the following:

1. Fluid level
2. ATF leaks
3. Road Test:
   - Check proper shift points
   - Engine performance
4. Correctly adjusted throttle sensor
5. Gearshift cable adjustment
6. Correct stall test results
7. Inhibitor switch connections
8. Correct pressure test results

Gearshift Cable Adjustment

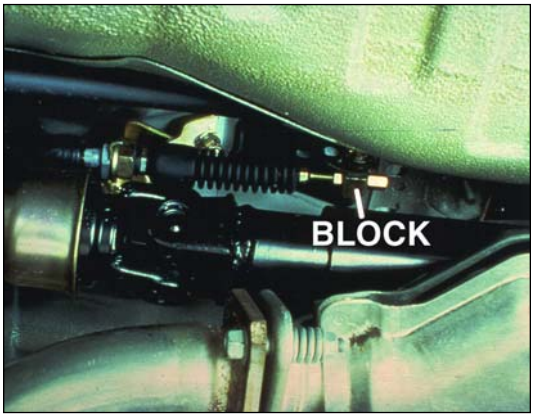

Cable Adjustment

Place the transmission in neutral with the engine OFF. Then loosen the locking nut and the adjusting nut. Push the shift lever arm rearward and tighten the adjusting nut until it contacts the connecting block. Finally, secure the cable with the locking nut and double check the operation.

After adjusting the gearshift cable, verify the correct inhibitor switch position. Remove the cable from the inhibitor switch in order to perform the adjustment. The switch must be in neutral.

Then insert the special tool #499267300 Stopper Pin (available from Kent-Moore by calling 800.345.2233) through the two levers of the switch into the depression in the switch body. Next, loosen the three retaining bolts and rotate the inhibitor to adjust. Finally, reinstall the cable and reconfirm the cable adjustment.

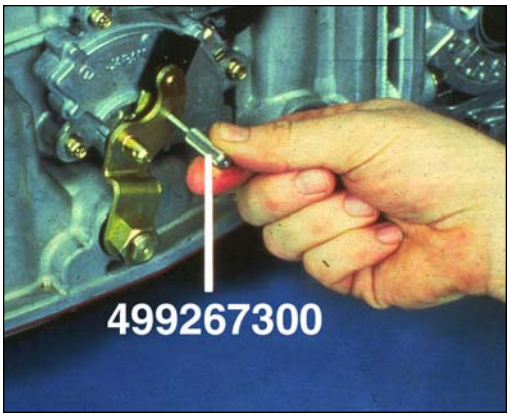

Inhibitor Switch / Adjustment

Stall Test

The stall test checks the operating condition of the AT clutches the torque converter and the engine. Perform these checks in D, 3, 2 and Reverse.

Stall Test Results

Higher than normal RPM indicates one or more of the following:

- Slippage of the forward clutch
- One way clutch (OWC) not holding
- Low/Rev, brake slipping
- Overall low line pressure

Lower than normal RPM indicates one or more of the following:

- Incorrect throttle adjustment
- Poor engine operation
- Torque converter stator slippage

Time Lag Test

The time lag test checks the operation of the forward clutch, the reverse clutch, the low/reverse brake, OWC 3-4 and OWC 1-2.

Perform this test at operating temperature. Idle the engine with the NC OFF. Confirm the proper idle speed in N and correct if necessary. Then shift into D and measure the time (seconds) to full engagement. It should take less than 1.2 seconds. Then shift into R and measure the time. It should take less than 1.5 seconds.

Time Lag Results:
If the time takes longer from N to D, it may indicate one or more of the following:

- Low line pressure
- Worn forward clutch
- OWC problem

If the time takes longer from N to R, it may indicate one or more of the following:

- Low line pressure
- Worn reverse clutch
- Worn low/rev brake

Pressure Test

Perform a pressure test when all the circuits show evidence of slippage or when the circuits show negative results from the time lag test.

This test should also be performed if there is excessive shift shock, delayed shifting, or it the vehicle is immobile.

Perform this test by connecting the pressure gauge to the oil pump outlet test port in order to determine the overall line pressure. Should a particular component be suspected, perform pressure tests at its unique test port. Check for minimum and maximum values at each port.

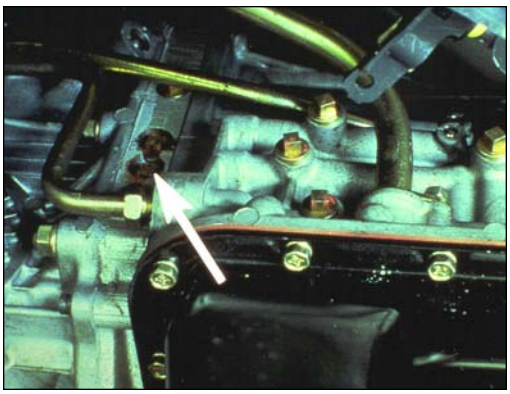

Transmission Pressure Test Port

On Car Service/Adjustments

The following can be performed on the vehicle:

- Checking/changing fluids
- Band adjustment
- Valve body servicing
- Shift Linkage adjustment/replacement
- Inhibitor switch adjustment/replacement
- Harness repair/replacement
- Transfer clutch assembly (servicing/replacement)
- Speed sensors replacement