ALTERNATOR & REGULATOR - MITSUBISHI

1996 Subaru SVX

1995-96 STARTING & CHARGING SYSTEMS
Subaru Alternator & Regulators - Mitsubishi

SVX

DESCRIPTION

Mitsubishi conventional 3-phase, self-rectifying generator contains 8 diodes (4 positive and 4 negative) that rectify current. The generator has a built-in regulator which controls:
Voltage Regulation The on-off operation of transistor Tr1, connects and disconnects the field current flow, providing a constant level of output voltage. See WIRING DIAGRAM.

Diagnosis Warning
When any of the following problems occur, the charge light illuminates.

* No voltage generation: Brush wear exceeds specified limits, field coil circuit is broken, etc.
* Excessive output: Output voltage is greater than about 16 volts.
* Terminal ``B'' disconnection: Harness is disconnected from generator terminal ``B''.
* Terminal ``S'' disconnection: Harness is disconnected from generator terminal ``S''. In this case, voltage is slightly greater than specified regulated voltage; however, voltage regulation is still controlled and the battery is prevented from being overcharged.

ADJUSTMENTS

BELT TENSION

BELT ADJUSTMENT TABLE

Application	(1) Deflection In. (mm)
New Belt	.16-.20 (4-5)
Used Belt	.20-.24 (5-6)

(1) - Measure deflection with 22 lbs. (10 kg) of force applied on longest belt run.

ON-VEHICLE TESTING

Turn ignition on, with engine off. If charge light does not illuminate, disconnect generator body harness connector. If charge light does not illuminate when terminal ``L'' of harness connector is grounded, replace charge light bulb. If charge light illuminates when terminal ``L'' of harness connector is grounded, check IC regulator and positive terminal of diode.

If charge light illuminates with ignition on, start engine. If charge light remains on or blinks, check fan belt, check ``S'' or ``B'' terminal for improper contact and generator output.

If charge light is off while engine idles, check voltage at battery terminal while running engine at 1500 RPM. If voltage is 15.5

volts or greater, replace IC regulator assembly. If voltage is less than 12.5 volts, check IC regulator as a single unit. If voltage is 12.5-15.5 volts, turn light switch on while engine idles. If charge light illuminates, check diode assembly. If charge light does not illuminate, problem is not present.

GENERATOR OUTPUT SPECIFICATIONS TABLE

Engine RPM	Amps
1500	39 Or Greater
2500	73 Or Greater
5000	95 Or Greater

BENCH TESTING

DIODE ASSEMBLY

To check diode assembly (diode trio), remove assembly from rear cover. Using an ohmmeter, check each diode for continuity. Continuity should be present in one direction only. If continuity is present in both directions, diode is open. If any diodes are defective, replace complete rectifier assembly.

ROTOR

Resistance across rotor slip rings should be about 3 ohms. If continuity is not present, replace rotor. Check continuity between each slip ring and rotor core/shaft, individually. If continuity is present, rotor coil and/or slip ring is grounded. Replace rotor.

SLIP RING DIAMETER TABLE

Standard In. (mm)	Limit In. (mm)
0.894 (22.7)	0.870 (22.1)

STATOR

Ensure continuity is not present between stator coil leads and stator core. Continuity should be present between leads of stator coil. If continuity is not present, replace stator.

BRUSHES

Replace brushes if brush length is .31’’ (8 mm) or less, or if brushes are down to wear limit line (bottom line of Mitsubishi symbol box). Remove brushes from holder by unsoldering pigtail from terminal. To replace, solder pigtail to terminal.

OVERHAUL

To remove a stuck rear cover after removing case bolts, use soldering iron or heat gun to warm rear cover bearing housing to about 122-140 F° (50-60 C°). This will expand housing enough to slide cover off rotor bearing. DO NOT lose spring washer located in rear cover bearing bore. See Fig. 1.

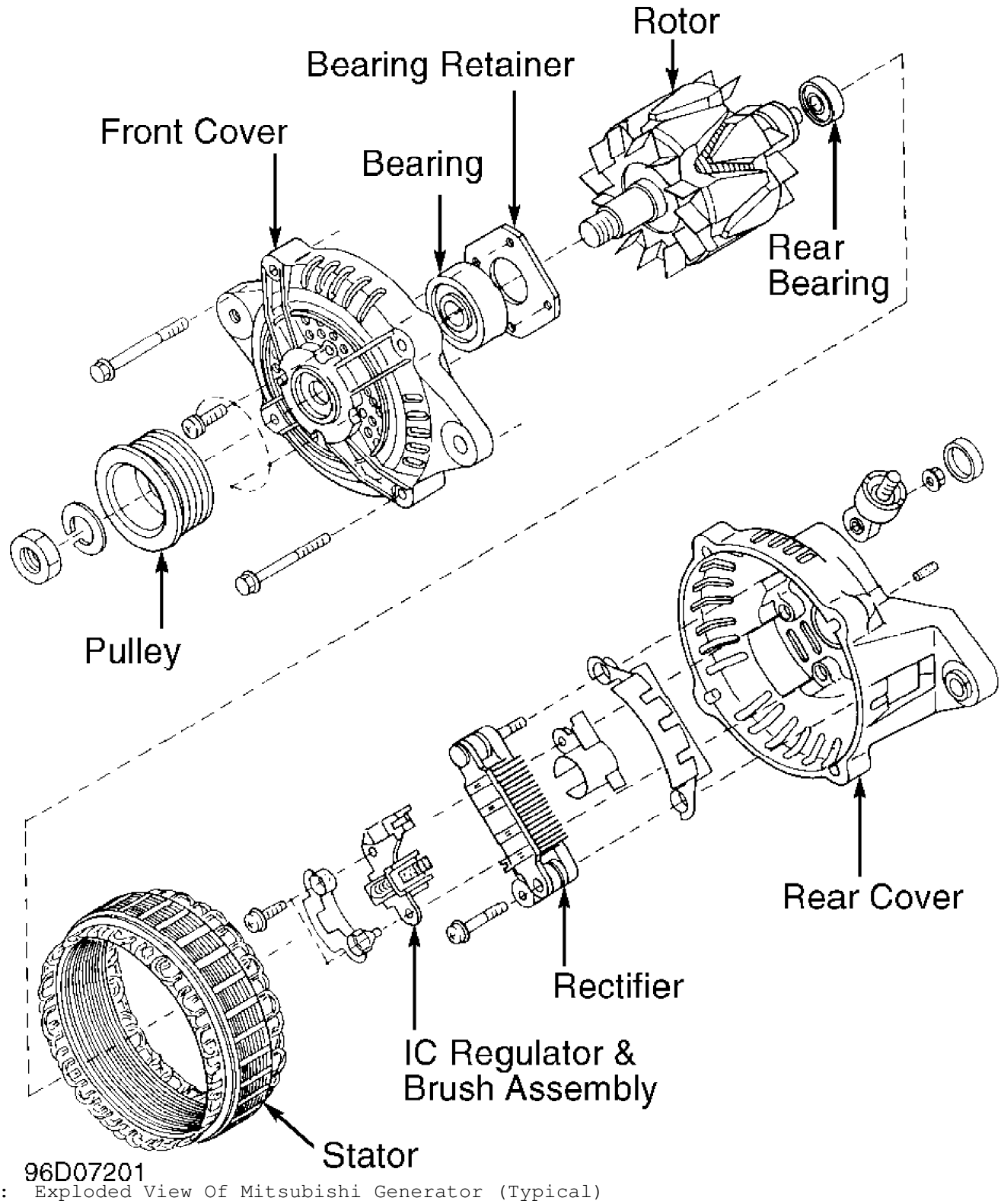

Fig. 1: Exploded View Of Mitsubishi Generator (Typical)
Courtesy of Subaru of America, Inc.

WIRING DIAGRAM

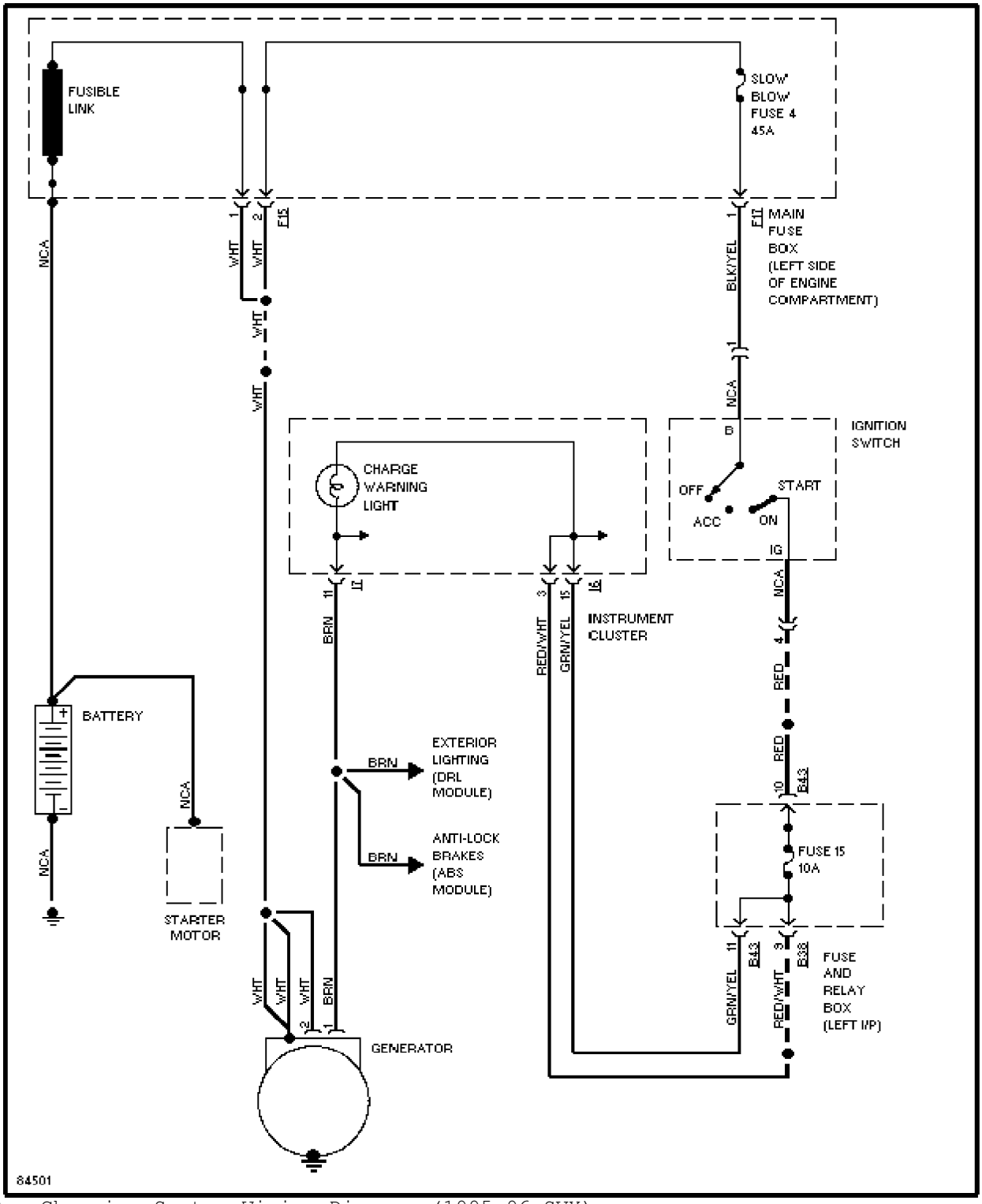

Fig. 2: Charging System Wiring Diagram (1995-96 SVX)